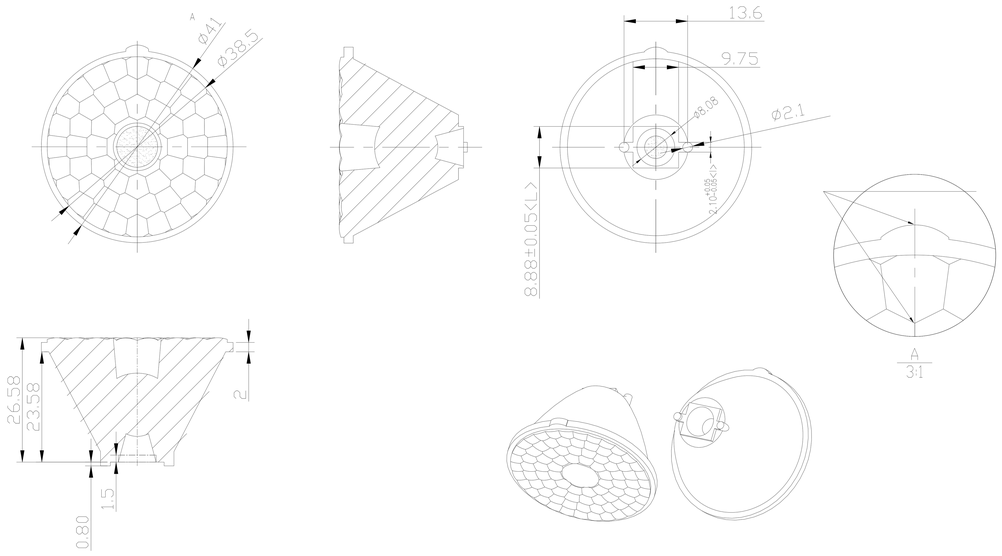

NOTE:
1. ALL SURFACES NO SHRINKAGE, BURRS, JUNCTION LINES ALLOWED
2. CRITICAL DIMENSIONS ARE INDICATED ON THE DRAWING
3. ALL INDICATED SURFACES ARE POLISHED, THE OPTICAL SURFACE POLISHING MUST BE SPI-A1 STANDARD
4. THE PARTS IS COMPLIANT TO ROHS AND REACH STANDARD

CHANGE					PART		顏色 COLOR	Transparency	SCALE	1:1	ASAHI OPTICS LIMITED
					0 ~ 10	±0.05					
					10 ~ 20	±0.10	材质 MATERIAL	PMMA	UNIT	mm	
					20 ~ 30	±0.15					
A/0	2018-09-21	NEW	——	——	30 ~	±0.20	设计 DESIGN	C. Y. CAI 2018-09-21	SIZE	A4	料号 PART NO. RGBW41D1040GZOOM
					Angle	± 1°					
版Ⅱ REV	日期 DATE	變更說明 MODIFICATION DESCRIPTION	照 CHANGE	核准 APPROVE	DIM	TOL	核准 APPROVE		SHEET		品名 Product: Stage light lens

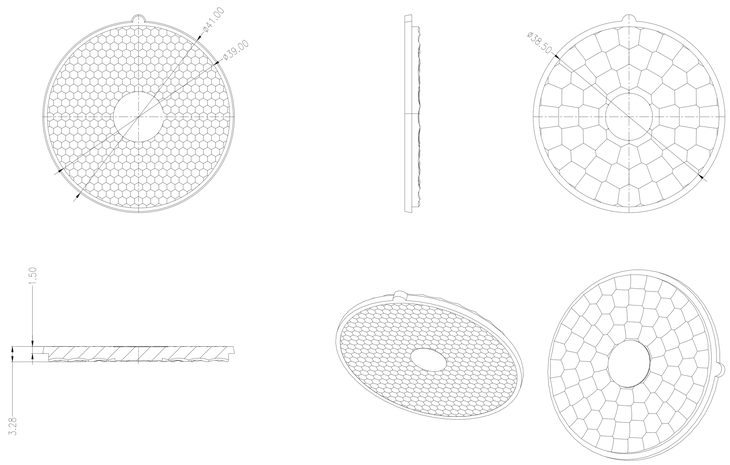

NOTE:
1. ALL SURFACES NO SHRINKAGE, BURRS, JUNCTION LINES ALLOWED
2. CRITICAL DIMENSIONS ARE INDICATED ON THE DRAWING
3. ALL INDICATED SURFACES ARE POLISHED, THE OPTICAL SURFACE POLISHING MUST BE SPI-A1 STANDARD
4. THE PARTS IS COMPLIANT TO ROHS AND REACH STANDARD

CHANGE					PART		顏色 COLOR	Transparency	SCALE	1:1	ASAHI OPTICS LIMITED
					0 ~ 10	±0.05					
					10 ~ 20	±0.10	材质 MATERIAL	PMMA	UNIT	mm	
					20 ~ 30	±0.15					
A/0	2018-09-21	NEW	——	——	30 ~	±0.20	设计 DESIGN	C. Y. CAI 2018-09-21	SIZE	A4	料号 PART NO. RGBW41D1040GZOOM
					Angle	± 1°					
版Ⅱ REV	日期 DATE	變更說明 MODIFICATION DESCRIPTION	照 CHANGE	核准 APPROVE	DIM	TOL	核准 APPROVE		SHEET		品名 Product: Stage light lens